Outline & Mounting Dimensions

- As per the drawing below.
- LW36-72.5 Dead-Tank Circuit Breaker Weight: 1,500 kg
- Front face (windward) area: 4.5 m²

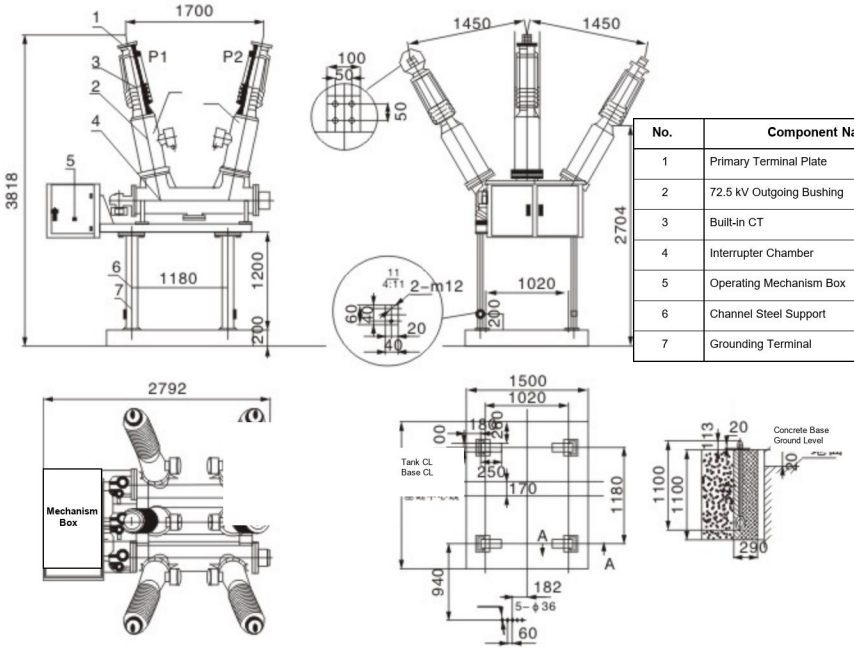

No.	Component Name	Remarks
1	Primary Terminal Plate	Silver-plated Aluminum
2	72.5 kV Outgoing Bushing	High-strength Porcelain (Brown)
3	Built-in CT	Bushing / Feedthrough Type
4	Interrupter Chamber	Dead-Tank Type
5	Operating Mechanism Box	Incl. CT26 Mech & Aux Panel
6	Channel Steel Support	120 mm Structural Steel
7	Grounding Terminal	4 Points in Total

Fig. 1 Outline and Foundation Diagram of LW36-72.5T Dead-Tank Circuit Breaker