Outline & Mounting Dimensions

- As per the drawing below.
- LW36-145 Circuit Breaker Weight: 1.800 kg

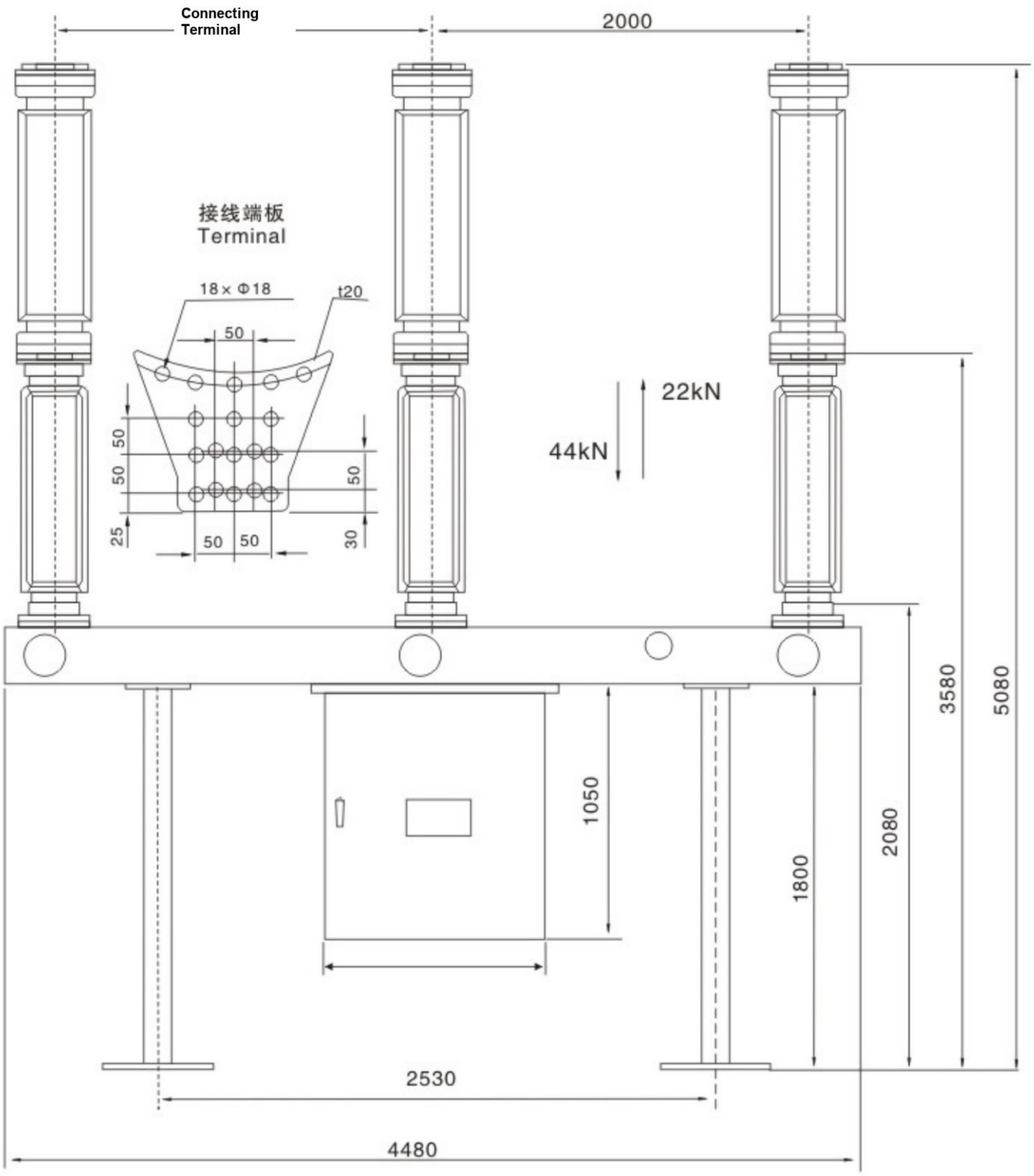

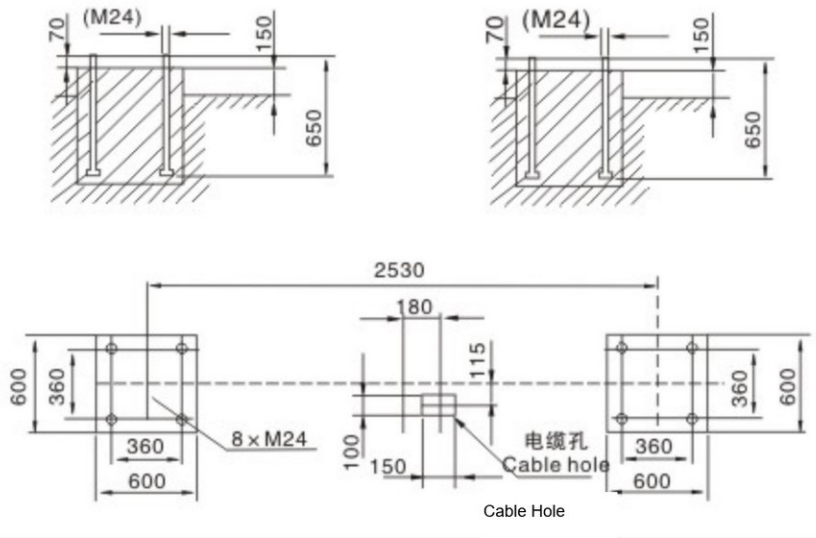

Cable Hole