Outline & Mounting Dimensions

- As per the drawing below.
- LW36-126 Dead-Tank Circuit Breaker Weight: 2,200 kg

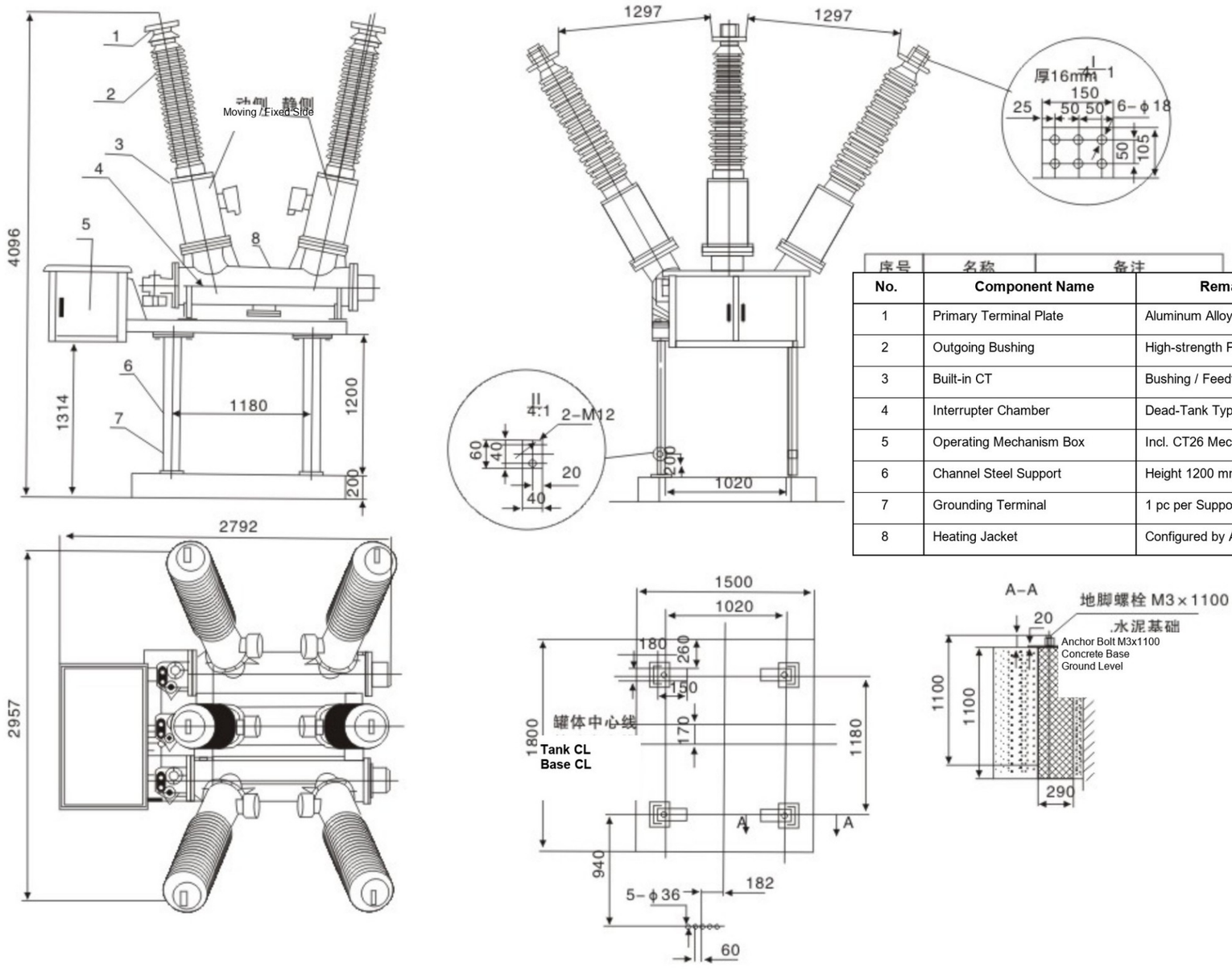

No.	Component Name	Remarks
1	Primary Terminal Plate	Aluminum Alloy
2	Outgoing Bushing	High-strength Porcelain
3	Built-in CT	Bushing / Feedthrough Type
4	Interrupter Chamber	Dead-Tank Type
5	Operating Mechanism Box	Incl. CT26 Mech & Aux Panel
6	Channel Steel Support	Height 1200 mm
7	Grounding Terminal	1 pc per Support Leg
8	Heating Jacket	Configured by Ambient Temp

Fig. 1 Outline and Foundation Diagram of LW36-126T Dead-Tank Circuit Breaker