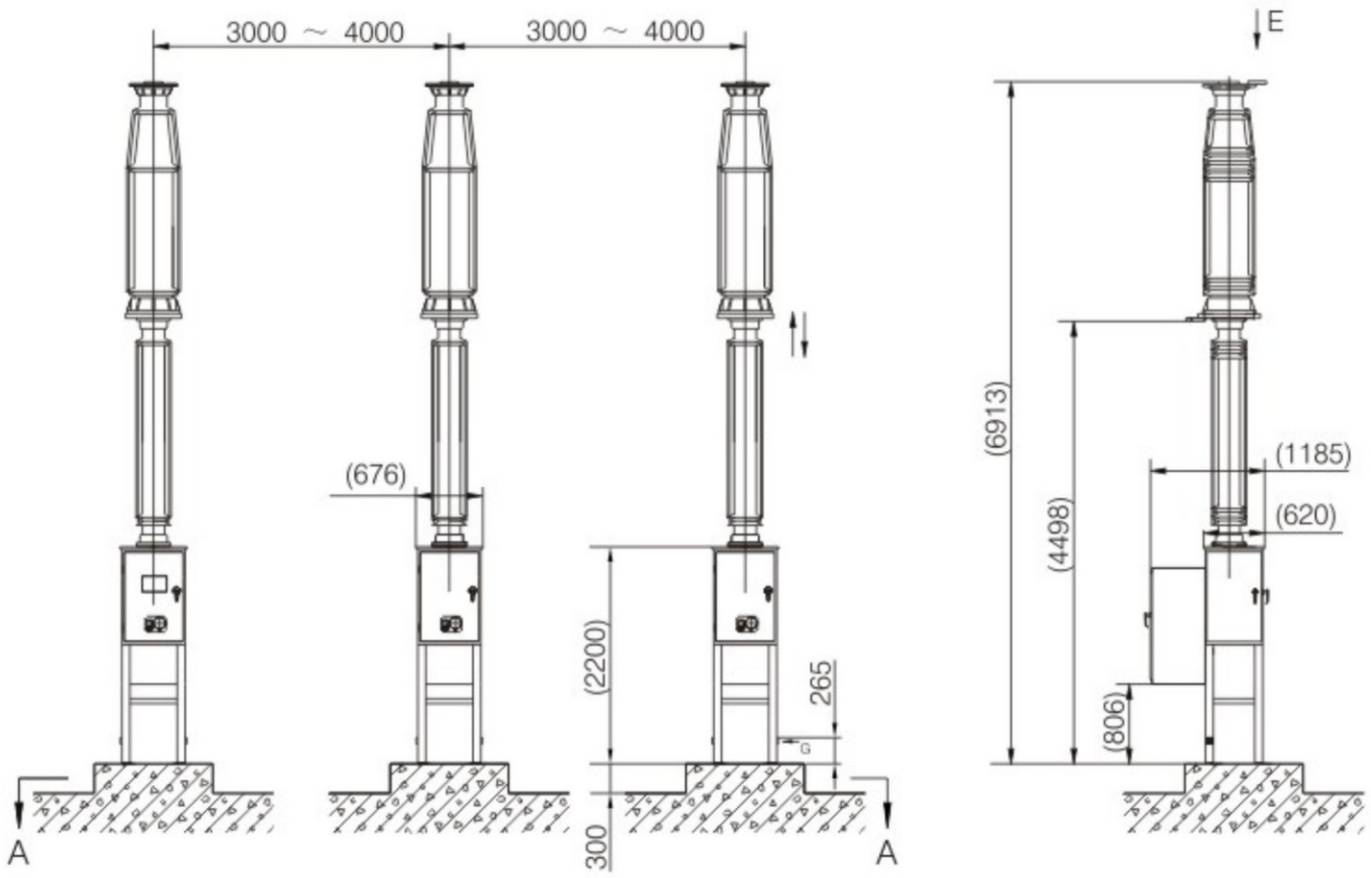

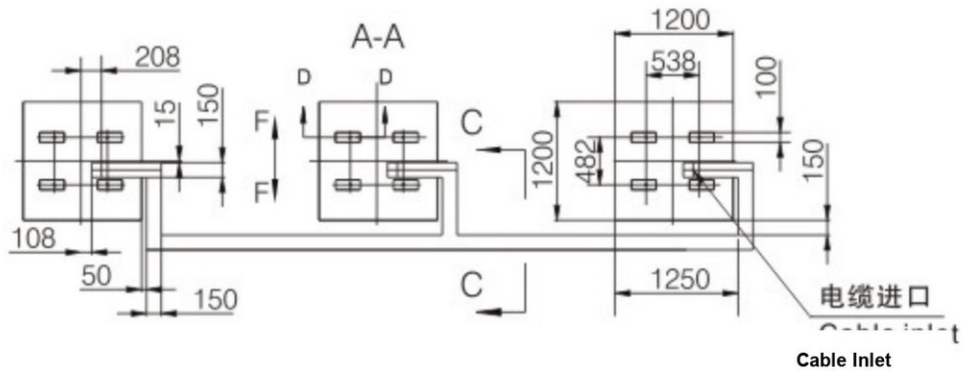

Cable Inlet

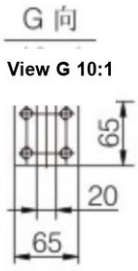

View G 10:1

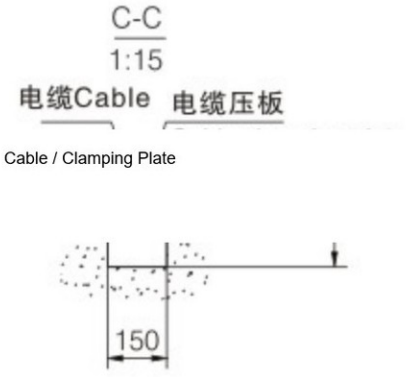

Cable / Clamping Plate

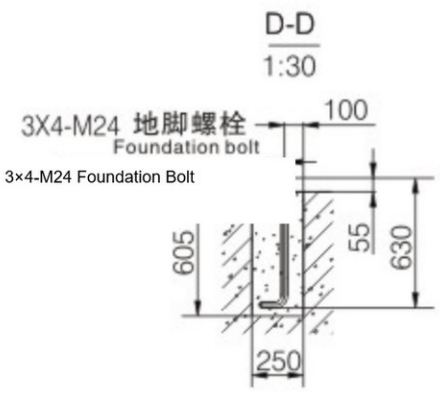

3×4-M24 Foundation Bolt

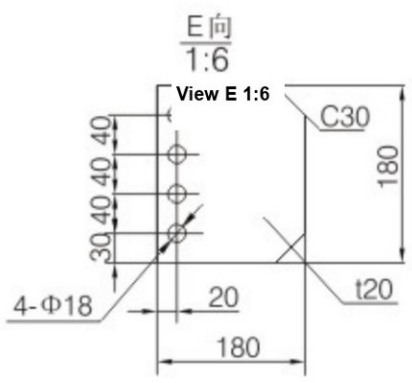

View E 1:6

1. Weight: 4,500 kg (with SF6 gas); Total SF6 gas weight: 24 kg.
2. Foundation Load: Static load 4,500 kg (three phases), 1,500 kg (each pole);
   Dynamic horizontal direction F: 2,500 kg; Vertical upward: 3,500 kg; Vertical downward: 6,000 kg.
3. Level tolerance of concrete foundation surface shall not exceed 1.5 mm.
4. Mounting holes for connecting terminal block and primary bus line: to be drilled on site as required.
   Terminal block material: Aluminum alloy 2A12-T4.